Envoy LIGHTING

Job Name:
Type:
Part #:
Notes:

EVT-KFS

Vapor Tight Luminaires
Kelvin Field Selectable

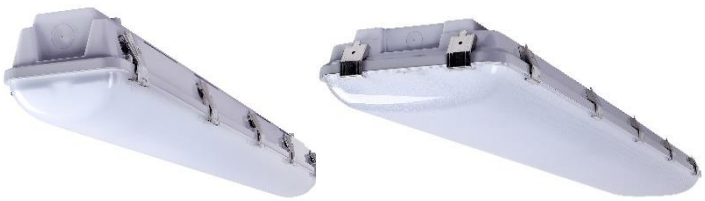

STANDARD

Intertek | DLC LISTED | DLC LISTED PREMIUM | FC | WET | 1.0kV Surge Protection

FEATURES

- *Field selectable color temperatures include 3500k, 4000k and 5000k.*
- *Long-life LEDs provide 137,000 hours of operation with at least 70% of initial lumen output (L_{70}), and 42,000 hours with at least 90% of initial lumen output (L_{90}).*
- *LED chromaticity based on ≤ 5-step ANSI quadrangles.*
- *LED color maintenance ≤ 0.002 chromaticity shift (Δu'v') over the initial 6,000 hours of operation.*
- *Provides 6,000, 14,000, or 20,000 nominal lumens using 42, 100, or 150 nominal watts.*
- *Universal 120-277 AC voltage (50-60Hz) is standard.*
- *0-10vdc dimming drivers are standard.*
- *Power factor > 0.90.*
- *Total harmonic distortion < 20%.*
- *Color rendering index > 80.*
- *Polycarbonate housing and frosted lenses are standard.*
- *Easy installation in new construction or retrofit.*

* *Contact factory for other color temperatures and lumen packages.*
** *L_{70} & L_{90} hours are IES TM-21-11 calculated hours.*

WARRANTY & LISTINGS

- *cETLus listed for damp locations in ambient temperatures from -20°C to 50°C (-4°F to 122°F).*
- *EVT-6L = DLC standard.*
- *EVT-14L & EVT-20L = DLC premium.*
- *IP67 rated for ingress protection.*
- *IK10 rated for impact.*
- *ETL sanitation listed for non-splash food zone to comply with NSF/ANSI 2 standard.*
- *NEMA 4X.*
- *Complies with FCC Part 15, class A.*
- *Complies with IEC/EN61000-4-5, input transient protection (1.0kV).*
- *Surge protection = 1.0kV.*
- *5-year warranty of all electronics and housing.*

DIMENSIONS

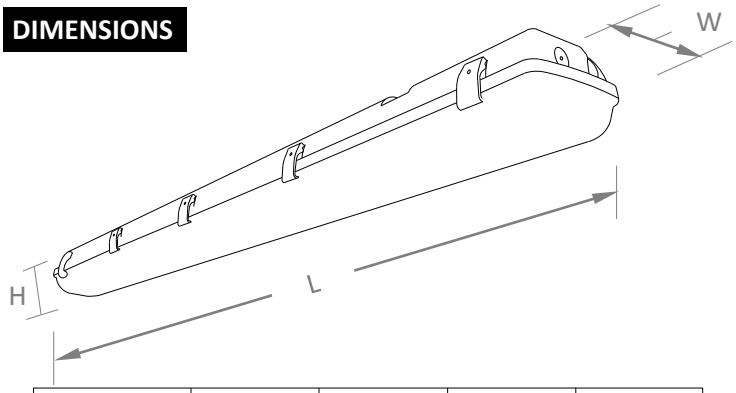

Model	Length (L)	Width (W)	Height (H)	Weight
EVT-6L-KFS	45.7"	4.7"	4.3"	4 lbs.
EVT-14L-KFS	50"	10"	4.1"	13 lbs.
EVT-20L-KFS	50"	10"	4.1"	14 lbs.

ORDERING INFORMATION

Example: EVT-14L-KFS

Series	Nominal Lumen Output		Color Temperature	
EVT	6L	6000 lumens	KFS*	3500k
	14L	14,000 lumens		4000k
	20L	20,000 lumens	*Field selectable	5000k

Office: 215-512-7000 • Fax: 267-288-5604
www.EnvoyLighting.com

© 2022, Envoy Lighting, Inc. ALL RIGHTS RESERVED

Envoy LIGHTING

Job Name:
Type:
Part #:
Notes:

ELECTRICAL DATA

Series	Measurements	EVT-6L			EVT-14L			EVT-16L		
		3500K	4000K	5000K	3500K	4000K	5000K	3500K	4000K	5000K
EVT-KFS	Lumens	5965	6256	6105	13,673	14,327	13,956	20,380	21,447	20,590
	Watts	44	42	44	99	93	99	150	141	150
	Efficacy	136	148	138	137	156	141	136	152	137
	Input Current (A)	120V = 0.37A	120V = 0.35A	120V = 0.37A	120V = 0.83A	120V = 0.78A	120V = 0.83A	120V = 1.25A	120V = 1.18A	120V = 1.25A
		240V = 0.18A	240V = 0.18A	240V = 0.18A	240V = 0.41A	240V = 0.39A	240V = 0.41A	240V = 0.63A	240V = 0.59A	240V = 0.63A
		277V = 0.16A	277V = 0.15A	277V = 0.16A	277V = 0.36A	277V = 0.34A	277V = 0.36A	277V = 0.54A	277V = 0.51A	277V = 0.54A

PHOTOMETRIC DATA

EVT-6L-KFS

Luminaire Data

Description	4' Vapor Tight 6L 35K - KFS
Total Lumens	5,965
Input Wattage	44
Efficacy (lm/W)	136
Spacing Criterion (0-180°)	1.28
Spacing Criterion (90-270°)	1.28

Zonal Lumen Summary

Zone	Lumens	%Fixt
0-20°	621	10.4%
0-30°	1,323	22.2%
0-40°	2,180	36.5%
20-50°	2,468	41.4%
40-70°	2,476	41.5%
0-60°	3,942	66.1%
0-80°	5,183	86.9%
0-90°	5,526	92.6%
90-180°	439	7.4%
0-180°	5,965	100.0%

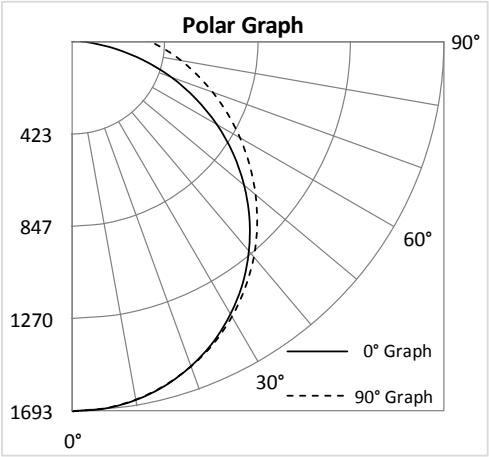

EVT-14L-KFS

Luminaire Data

Description	4' Vapor Tight 14L 35K - KFS
Total Lumens	13,673
Input Wattage	100
Efficacy (lm/W)	137
Spacing Criterion (0-180°)	1.32
Spacing Criterion (90-270°)	1.26

Zonal Lumen Summary

Zone	Lumens	%Fixt
0-20°	1,653	12.1%
0-30°	3,534	25.8%
0-40°	5,815	42.5%
20-50°	6,529	47.8%
40-70°	6,136	44.9%
0-60°	10,316	75.4%
0-80°	12,962	94.8%
0-90°	13,392	97.9%
90-180°	281	2.1%
0-180°	13,673	100.0%

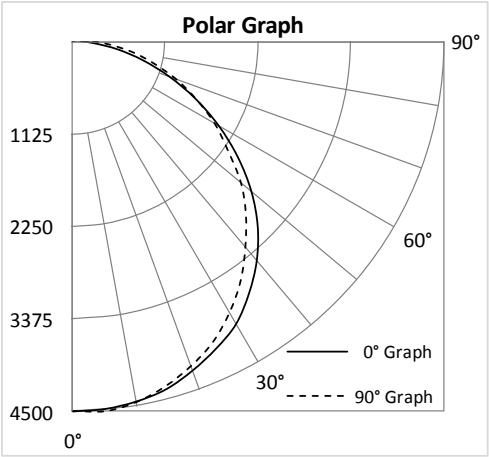

Office: 215-512-7000 • Fax: 267-288-5604
www.EnvoyLighting.com

© 2022, Envoy Lighting, Inc. ALL RIGHTS RESERVED

Job Name:

Type:

Part #:

Notes:

PHOTOMETRIC DATA

EVT-20L-KFS

Luminaire Data

Description	4' Vapor Tight 20L 35K - KFS
Total Lumens	20,380
Input Wattage	150
Efficacy (lm/W)	136
Spacing Criterion (0-180°)	1.32
Spacing Criterion (90-270°)	1.28

Zonal Lumen Summary

Zone	Lumens	%Fixt
0-20°	2,470	12.1%
0-30°	5,280	25.9%
0-40°	8,691	42.6%
20-50°	9,761	47.9%
40-70°	9,147	44.9%
0-60°	15,414	75.6%
0-80°	19,327	94.8%
0-90°	19,959	97.9%
90-180°	421	2.1%
0-180°	20,380	100.0%

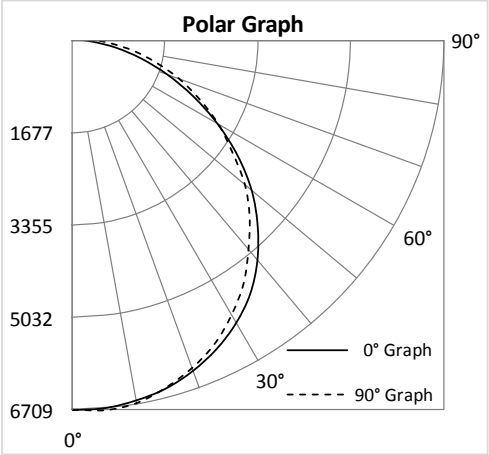

© 2022, Envoy Lighting, Inc. ALL RIGHTS RESERVED